MINE BAR WITH ROTATING HALOGEN BEACON

RHBAR1250C5 Dimension Diagram

AUTOMOTIVE | MINING | MARINE

Dimensions:

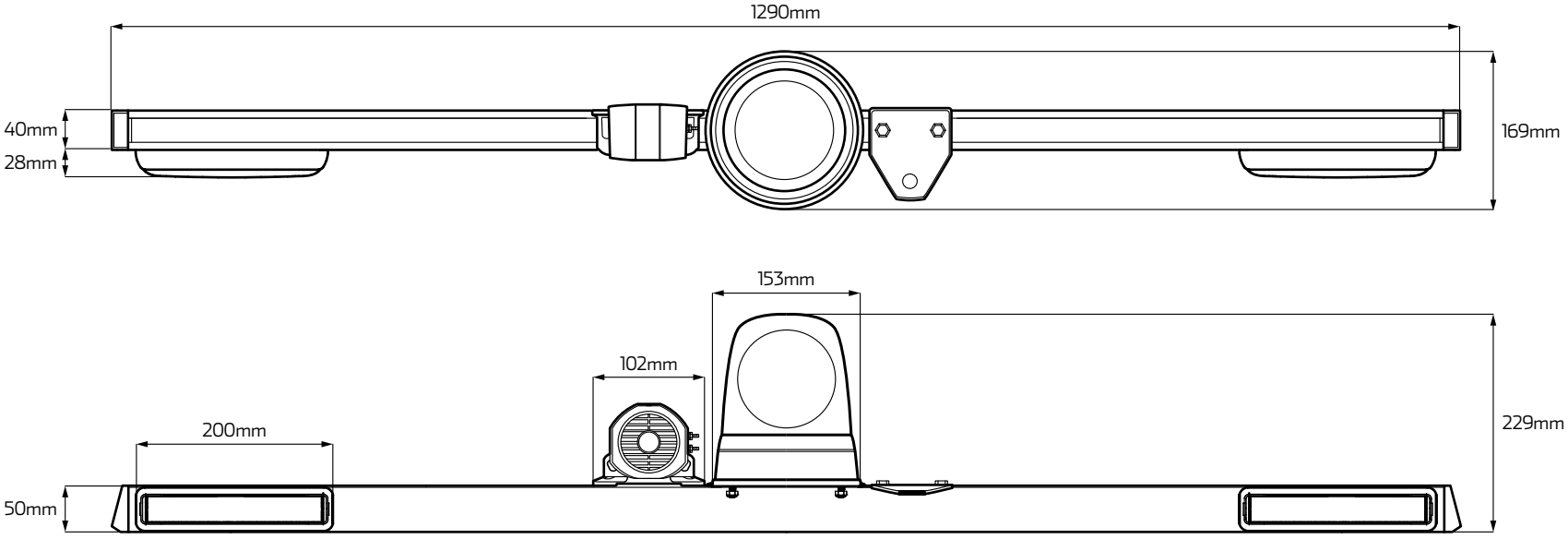

+Allowance of +/- 3mm.
*To avoid warranty issues QVEE recommends product are fitted by a qualified Auto Electrician.